VECTOR OPTICS®

SCRAPPER

USER MANUAL
RED DOT SCOPE



READ IT BEFORE USE!!!

READ AND UNDERSTAND THE CONTENTS OF YOUR FIREARM'S AND SCOPE MANUAL. FOLLOW ALL STANDARD SAFETY PRECAUTIONS AND PROCEDURES DURING FIREARM OPERATION.

▼ *Scan the QR code to learn more about VectorOptics*

VECTOROPTICS

USER MANUAL

FACEBOOK

INSTAGRAM

NEVER LOOK AT THE SUN THROUGH THE RED DOT SCOPE (OR ANY OTHER OPTICAL INSTRUMENT). IT MAY PERMANENTLY DAMAGE YOUR EYES.
MAKE SURE FIREARMS ARE UNLOADED AND POINTED IN THE SAFE DIRECTION.

CONTENTS

MOUNTING 4

ZEROING 5

TURNING ON & ILLUMATION ADJUSTMENT 6

BATTERY EXCHANGE 7

SEALED, WATER RESISTANT AND FOGPROOF 8

MAINTENANCE 8

STORAGE 8

RETICLE 9

WARRANTY 10

NOTES 12

MOUNTING

The red dot scope is installed on the gun by means of its integrated weaver / picatinny mount.Place the scope objective lens towards the muzzle. Set the scope flat on top of the rail base. Make sure the cross bolt is located in a recoil groove. For safety reasons, allow at least 3 inches of clearance between the scope and your eyes.

After the scope is in place securely flip back the quick detach lever. If the mount is too loose or tight, adjust the mount nut on the other side.



Do not over-tighten the mount, or it may damage your scope. Max 30 in/lbs (2.5 ft / lbs, or 3.4 Nm) for mount base screws.

ZEROING

The scope features finger-adjustable audible-click elevation and windage adjustments. Referring to the point of impact you will need to adjust both windage and elevation screws. The elevation is the vertical (up-and-down) adjustment, usually on the top of the scope. Windage is the horizontal (left-to-right) adjustment, usually on the right of the scope.

The scope feature 1 MOA (Minute of Angle) windage & elevation adjustment with audible clicks, meaning that 1 click moves the point of impact = 1 inch at 100 yards.

With the scope mounted, rest the firearm onto a solid support and aim at a target 100 yards away. Slowly shoot a small 3 to 5 round test group onto your target. Adjust windage & elevation screws in the direction you want to move the bullet impact. Should your impacts be below your point of aim, dial UP to reach zero. Should your impacts be left to your point of aim, dial R(right) to reach zero. Each click of adjustment moves the point of impact. Shoot another 3 to 5 round test group. Repeat until you are satisfied with the point of aim.

TURNING ON & ILLUMINATION ADJUSTMENT

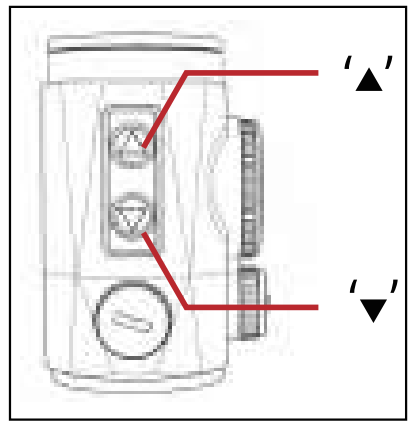

The scope is activated by using the digital on/off switch placed on the left / top of the sight. The sight has 8 levels of visible dot & 2 NV dots. Press and hold the '▼' switch for 1second to turn the unit on. Subsequently, press the '▼' or '+' switch will increase the dot intensity. Press the '+' button again at the highest level to make it flash 3 times (If applicable) .

Press the '▲' or '-' switch will decrease the dot intensity and press the '-' button again at the lowest level to make it flash 3 times (If applicable) . Press and hold the '▲' or '-' switch for more than 3 seconds to turn the sight off.

The memory function automatically remembers the last power-off level. (If applicable) .

Solar Power Engaged: It allows the red dot scope to continue to power on when the battery fails. It comes with an auto-light sense feature. The dot intensity will automatically change its brightness to match the ambient lighting conditions. You can still manually control the dot intensity by pressing the '▲'or '▼'switch.

BATTERY EXCHANGE



Your scope illumination is powered by 1 piece of CR2032 lithium button battery. To insert, remove or replace the battery: Release the battery compartment cover. Remove the used battery from the battery compartment. Insert a new one from a reputable manufacturer with the positive (+) side UP. Screw on the battery compartment cover.

Caution: Should the illumination grows dim or not turn on, you will need to exchange the battery.

Solar Power Engaged: Solar power engagement allows the red dot scope to continue to power when your battery fails or you don't have batteries.

- *KEEP BATTERY AWAY FROM CHILDREN.*
- *IF BATTERY IS SWALLOWED OR ENTERS THE BODY, SEEK IMMEDIATE MEDICAL ATTENTION.*
- *BATTERY MISUE OR ABUSE MAY RESULT IN LEAKAGE, FIRE OR EXPLOSION.*
- *DISPOSE OF USED BATTERIES IMMEDIATELY.*

SEALED, WATERPROOF AND FOGPROOF

The scope is nitrogen-purged to remove any vestige of internal moisture, also has O-ring to prevent the entry of dust or moisture.

MAINTENANCE

Your scope, though amazingly tough, is a precision instrument that deserves reasonable cautious care.

- When cleaning the lens, first blow away any dirt and dust, or use a soft lens brush. Fingerprints and lubricants can be wiped off with lens tissue, or soft clean cotton cloth, moistened with lens cleaning fluid.
- All moving parts of the scope are permanently lubricated. Do not try to lubricate them.
- No maintenance is needed on the scope's exterior surface, except to occasionally wipe off dirt or fingerprints with a soft cloth.
- Use lens covers whenever convenient.

STORAGE

Avoid storing the scope in hot places, such as the passenger compartments of vehicles on hot days. The high temperatures could adversely affect the lubricants and sealants. A vehicle's trunk, a gun cabinet, or a closet is preferable. Never leave the scope where direct sunlight can enter either the objective lens. Damage may result from the concentration (burning glass effect) of the sun's rays.

RETICLE PATTERN

Muti Reticle (If applicable）

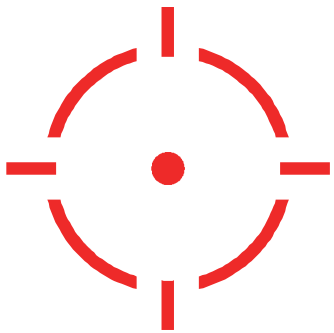

Circle + Crosshair Dot

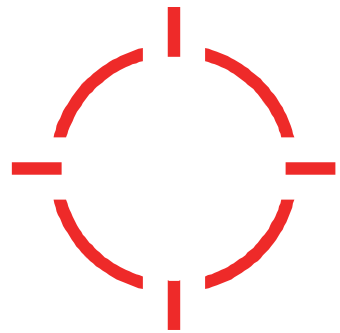

Crosshair Circle



Standard Dot

FOR MORE DETAILS ABOUT SCRAPPER, PLEASE SCAN QR CODE OR VISIT THE LINK：

https://www.youtube.com/shorts/Q5LO0Vcn3hU

VECTOR OPTICS TAILED VIP LIFETIME WARRANTY

Your VectorOptics Scrapper line products are covered by our T-VIP lifetime warranty. We will, at our option, either repair or replace your VectorOptics product without any cost if it is damaged or defective. If we can't repair your damaged product, we will replace it with a brand new one in perfect condition. We proudly stand behind our products. You have our word that we will do what it takes to retain your business as a satisfied customer. You can count on our T-VIP lifetime warranty.

- Unlimited full lifetime warranty.
- Reply to you in 1 working day.
- Free repair or replacement.
- Fully transferable.
- No invoice or receipt is needed.
- No question asked, however, we do appreciate your feedback.
- We pay for shipping back to you.

This warranty does not cover product loss, theft, deliberate damage, abuse, misapplication, or modification. This warranty does not apply to electronic components or batteries.

For warranty service please contact our Customer Service Department online at service@vectoroptics.com for return instructions. If you need to return the product, please ensure the shipment and keep the tracking records. We can not be responsible for your product until it has been received by our Customer Service Department.

For products not directly purchased from us, please contact the local dealer for applicable warranty info.

Any warranty must be registered and complete warranty terms by the link:

warranty.vectoroptics.com

We thank you for your business. Be Safe and Have Fun!



NOTES

NOTES

NOTES

NOTES

SCRAPPER

RED DOT SCOPE

Manual # Scrapper Series

www.vectoroptics.com

@ vector_optics